ISBN: 978-3-95450-227-1 ISSN: 2673-5490 doi:10.18429/JACoW-IPAC2022-TUOXGD2

WIRELESS IoT IN PARTICLE ACCELERATORS: A PROOF OF CONCEPT WITH THE IoT RADIATION MONITOR AT CERN

Salvatore Danzeca, Alessandro Zimmaro, Tony Cass, Alessandro Masi, Rodrigo Sierra, CERN
CH-1211, Geneva 23, Switzerland

Abstract

The Internet of Things (IoT) is an ecosystem of web-enabled "smart devices" that integrates sensors and communication hardware to collect, send, and act on data acquired from the environment around them. In particle accelerators, IoT is not a new concept: systems and instruments have long been connected to the network to receive and to send data that are stored, analysed, and later used. What has been missing so far, is the IoT concept of "smart devices", and particularly of "wireless connectivity". Wireless technologies play an important role in the Internet of Things. Indeed, they allow to deploy of operational devices quickly and easily, and they significantly reduce infrastructure costs. This paper gives an overview of the main advantages of using LoRa, a particular IoT technology used to deploy wireless radiation monitors within the CERN particle accelerator complex.

INTRODUCTION

At CERN, measurements of the radiation fields and quantities related to damage to electronics equipment are carried out by the RadMon system. The RadMon devices allow to measure radiation levels in the accelerator complex and investigate if instantaneous failures of electronic systems are caused by radiation. As with other accelerator instruments, these devices have limited mobility and are subject to a fixed location, which is usually close to critical equipment in the beam lines or experimental caverns. Wireless IoT Radiation Monitors have been developed as the result of the growing demand to carry out radiation measurements wherever the cabled infrastructure is not available. Here we describe the technologies used for the project and the various advantages of their deployment in a particle accelerator environment. Although the focus is on radiation monitoring applications, the work is aimed at developing an IoT platform capable of integrating multiple and diverse sensors and applications. This approach opens up the way for the deployment of different and heterogeneous implementations and applications that would have been impractical so far. In the first section, the IoT and the RadMon concepts are discussed along with their use and impact in the context of the control of particle accelerators. The second section describes the requirements and the characteristics of a wireless IoT network for particle accelerators, as well as the technology used in this proof of concept.

Finally, the IoT platform developed for radiation monitoring is presented along with the challenges and the possibilities that can be exploited in the future.

IoT AND RADIATION MONITORING

IoT

The term IoT includes everything connected to the internet. It is a concept that covers devices, networks, services, and data. All these layers were defined in the 2014 Cisco "reference" model [1]. The seven layers defined in the reference model are not uncommon to particle accelerators; indeed, all the equipment, sensors, and devices are connected and well-integrated in what is usually called a "control system" [2]. One of the big differences between the two relies on the connectivity possibilities. Particle accelerators strongly rely on cabled networks and wired infrastructure, while the IoT concept gained great momentum mainly thanks to a new generation of wireless technologies. If implemented in a particle accelerator, this allows quick connectivity, easy installation, and virtually no cabling. This has a huge impact on a) availability: being easy to install when needed with small deadtime b) observability: giving the multiple positions that the devices can reach, and, obviously, c) cost.

RadMon

In this work, the radiation monitoring system for CERN electronics serves as a practical example of how to embrace IoT technology, highlighting its main requirements and capabilities. RadMon is a system capable of measuring the main quantities related to the radiation effects on electronics, such as the Total Ionizing Dose (TID), the Displacement Damage (DD) [3] the High Energy Hadron fluence (HEH), and the Thermal Neutron fluence (ThN). This device is used to monitor the radiation levels on the electronic systems in the accelerators, anticipate electronic degradation, benchmark simulations and help in the investigation into the cause of failures.

The RadMon system is fully integrated into the CERN infrastructure [3]. It requires two cables, for power and for communication with a Front-End Computer (FEC) which can manage up to 32 devices on same Fieldbus [4]. In operation, it's very common for users to request measurements in locations where RadMons are not installed. It is very difficult, even impossible, to plan proactively, because they respond to the need of tracking failures on specific equipment. For these operational cases, a wireless, battery-powered, standalone radiation monitor has been introduced. The challenges of these types of developments are a) wireless communication from a few hundred to a few km range with a data rate of ~1kB/h; b) low power electronics capable of running over batteries for at least one year; c) radiation tolerance up to at least 250 Gy and d) low cost.

ISBN: 978-3-95450-227-1 ISSN: 2673-5490 doi:10.18429/JACoW-IPAC2022-TUOXGD2

WIRELESS TECHNOLOGIES

In this paper, a Wireless Sensor Network (WSN) is described. It aims to monitor different devices and sensors and send data to a central system for storage and analysis.

Tunnels Wireless Networking Solutions

An effective wireless sensor network must be power efficient, scalable, responsive, reliable, and mobile. In underground tunnel environments, such as particle accelerators, other constraints should be considered such as RF interference and ionizing radiation.

Wireless technology emission in CERN's underground facilities and experimental areas are coordinated with the host state radio frequency regulator (ANFR in France and OFCOM in Switzerland) to prevent any interference or disruption with external RF services. At the same time, the selected frequency ranges must avoid any RF system present in the area for physics or operational purposes (accelerators require RF cavities to perform their duties as an example). The second constraint (ionizing radiation) is more restrictive. The wireless technology emitter must be either radiation tolerant or installed in a shielded area. When coupled with tunnel lengths of more than 1 km without shielded zones, the topology choice for wireless solutions is significantly reduced.

To offer wireless connectivity in the accelerator and experimental areas, CERN deployed around 60 km of radiating cables connected to more than 50 injection points located in non-radiation areas [5-6]. However, the frequency bands used must be below 1 GHz, since the losses in the cable increase with the frequency. The radiating cable is already used for TETRA and TETRAPOL in the 400 MHz band for CERN's fire brigade and public safety agencies, UMTS in the 900 MHz band, LTE in the 800 MHz band, and 5G in 700 MHz band. The ISM band in Europe (868 MHz) is not used and was a good candidate to explore IoT wireless network solutions in the tunnels.

Low Power Wireless Solutions

This work is focused on Low Power Wide Area Network solutions (LPWAN), because they are extensively used in industrial IoT projects and are suited for long range and low data rate applications, such as that required for radiation monitoring of the electronics in the CERN accelerator complex. Three main LPWAN solutions were investigated: LoRaWAN, SigFox, and NB-IoT [7]. The three networks are similar in terms of scope and features. LoRaWAN was finally chosen because it is provider-independent which allows private networks to be created with open-source tools. In a LoRaWAN network, data transmitted by a node are typically received by multiple gateways. Each gateway forwards the received packet from the end node to the network server. This architecture allows redundancy and high coverage with the drawback of possible collisions and bottlenecks in communication. These last problems are mitigated in LoRaWAN with proper RF modulation methods and with additional layers for data acknowledgments.

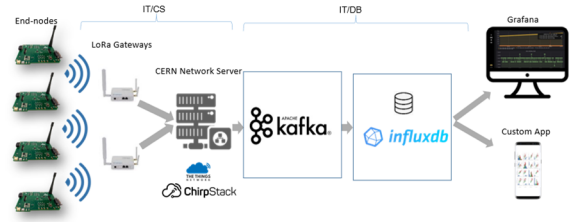

Figure 1: LoRaWAN architecture implemented in the LHC accelerator.

The radiating cable used at CERN is suited for communication at frequencies below 1GHz, and the use of the ISM band as the carrier frequency for LoraWAN perfectly fits this requirement.

Nowadays, LoRaWAN is present in the entire LHC tunnel. The gateways are installed in the shielded caverns connected to the radiating cables in the tunnel. This allows having full coverage of the LHC. In Fig. 1, is possible to see the LoRaWAN architecture implemented in the LHC accelerators.

WIRELESS MONITORING PLATFORM

An IoT Radiation-Tolerant Platform

The IoT Wireless monitoring platform [8], is a LoRaWan enabled, battery-powered, radiation-tolerant, and modular system capable of facing the requirements described in the previous paragraphs. All the embedded components are Components Off the Shelf (COTS), which ensure compliance with low-cost and more stringent low power requirements. This choice required intense radiation qualification and conformity testing following the CERN guidelines for radiation tolerant system testing [8-10]. All the components embed low-power features and modes, which allowed the system to respect lifetime requirements. An overview of the system is depicted in Fig. 2. System operations are handled by a microcontroller (MCU).

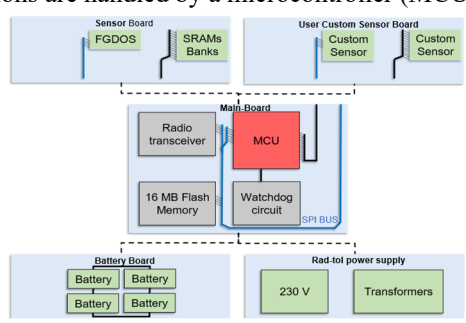

Figure 2: Overview of the Wireless IoT platform.

This component is preferred over the more widely used Field Programmable Gate Array (FPGA) in radiation environments because of its power-saving mode that safeguards the battery duration. A hardware solution (watchdog circuit) was implemented to mitigate Single Event Function Interruption (SEFI) [11]. A radio transceiver was used to implement the physical and MAC

ISBN: 978-3-95450-227-1 ISSN: 2673-5490 doi:10.18429/JACoW-IPAC2022-TUOXGD2

layer of the LoRaWAN protocol. In case of wireless communication unavailability, a 16 MB SPI non-volatile Flash memory is embedded in the design. The IoT Radiation device was developed for radiation to electronics measurements using a dedicated sensor board derived from the RadMon. Its modularity using a detachable sensor board allows possible future users to implement their own custom sensor. According to the same concept, the battery board can also be swapped with a radiation tolerant power supply inherited from the RadMon system.

Low Power Design Choices

Low power constraints and the need for flexibility drove most of the design choices. The operating principle also considers these two characteristics. The system is based on a duty cycle consisting of cycles of sleep, wake-up, measurements, storage, transmission, and sleep. Increasing the interval between two consecutive awakenings, also called the "measurement period", allows the battery life to be improved. As reported in Table 1, extension of the measurement period allows to meet the requirement of more than one year of lifetime. The flexibility to allow the measurement period to be changed on-the-fly when finer measurements are requested, is a feature currently being developed.

Table 1: System Lifetime as a Function of the Measurement Period

Measurement Period	Lifetime τ [Month]
5 Minutes	3.31
1 Hour	22.9
24 Hours	47.36

Radiation Tolerance

The radiation qualification of the IoT Wireless monitoring platform can be divided into 2 main phases as described in [8]: component level and system level qualification. During the first screening phase, all the components were qualified at the Paul Scherrer Institute (PSI) in Villigen, Switzerland, using a high-energy proton beam of 200 MeV [12] and then selected according to the radiation tolerance requirements of the system. In a second phase, the platform was tested at system level with a final validation at the CERN High energy AcceleRator Mixed field (CHARM) facility [13]. Those tests allowed the system to be assessed in terms of sensitivity and radiation tolerance, as well as being used to validate single event mitigation schemes. The platform withstood a TID of 275 Gy [8]. With this information, the expected lifetime and failure rate can be estimated by considering specific locations for the future High-Luminosity (HL) LHC [9]. In very harsh tunnel areas, such as some of the magnet cells of the dispersion suppressor region, where a TID of 100 Gy/year and 3·1012 HEH.cm-2/year is foreseen, the system should work for nearly 3 years performing self-recovered resets around 200 times per year. Conversely, in shielded alcove areas where the foreseen radiation levels are lower (TID of 25 Gy/year and 1.4·1010 HEH.cm-2/year), the system should work for over 10 years and reset less than once per year.

Operational Feedbacks

A first test on the long-range capability of the IoT Wireless monitoring platform was successfully performed inside the LHC[14]. The test was carried out in Point 1 where 2 LoRaWAN gateways were installed in the UPS RE18 alcove. Every 200 minutes five packets transmitted by the tested device were collected, and the corresponding Received Signal Strength Indicator (RSSI) was analyzed. In Fig. 3, the RSSI is depicted for each transmission point. The image shows that the device was still able to transmit the information over 2 km. This test proved that LoRa technology is a valid network that fits the long-range constraint of such applications in an accelerator.

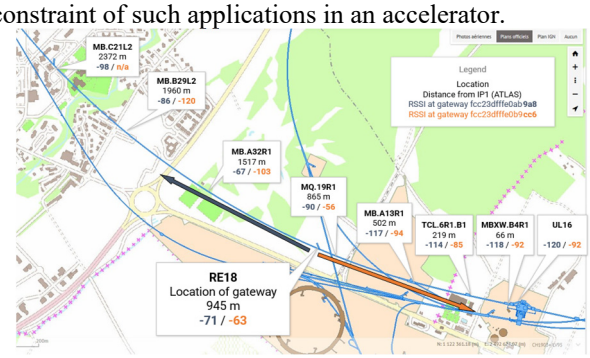

Figure 3: This picture shows the RSSI degradation when moving further away from the gateway position (RE18)[14].

In 2021, several systems were deployed to characterize the radiation levels of specific areas in CERN's Super Proton Synchrotron (SPS) [15]. For these measurements, the IoT Radiation platform was used in standalone mode, because the wireless network was not available. The standalone mode tested the IoT Radiation platform performance for storing the measurements in the non-volatile flash memory. These tests not only provided useful measurements for the characterization of these locations but also validated the proper functioning of the system.

CONCLUSION

As part of this work, the opportunities for utilizing a wireless IoT technology have been demonstrated by using a radiation monitoring device as a test application. The system requirements, the wireless challenges, and implementations have been described. LoRaWAN was found to be the best choice for implementing a wireless sensor network in the accelerator, fitting all the requirements. The Wireless IoT platform for radiation monitoring has been developed to be both radiation tolerant and compliant with this IoT technology. The proper tuning of the device parameters allows it to last on batteries for up to three years. The platform is modular with the capability of being adapted for other applications. Finally, the wireless capabilities of the device have been tested successfully inside the LHC with a coverage of around 2 km. Currently, the LoRa connectivity is available

ISBN: 978-3-95450-227-1 ISSN: 2673-5490 doi:10.18429/JACoW-IPAC2022-TUOXGD2

in the entire LHC tunnel allowing the deployment and the usage of this wireless platform.

REFERENCES

[1] Cisco, "The internet of things reference model." White Paper, 2014. http://cdn.iotwf.com/resources/71/IoT_Reference_Model_White_Paper_June_4_2014.pdf

[2] S. Deghaye and E. Fortescue-Beck, "Introduction to the BECO Control System," CERN Document Server, Dec. 18, 2020. https://cds.cern.ch/record/2748122

[3] R. Ferraro *et al.,* "Study of the Impact of the LHC Radiation Environments on the Synergistic Displacement Damage and Ionizing Dose Effect on Electronic Components," in *IEEE Transactions on Nuclear Science*, vol. 66, no. 7, pp. 1548-1556, July 2019, doi: 10.1109/TNS.2019.2902441

[4] G. Spiezia *et al.*, "A New RadMon Version for the LHC and its Injection Lines," *IEEE Transactions on Nuclear Science*, vol. 61, no. 6, pp. 3424–3431, Dec. 2014. doi:10.1109/TNS.2014.2365046

[5] S. Agosta, R. Sierra, and F. Chapron, "High-Speed Mobile Communications in Hostile Environments", *J. Phys. Conf. Ser.*, vol. 664, no. 5, p. 052001, Dec. 2015, doi:10.1088/1742-6596/664/5/052001

[6] R. Sierra and H. Odziemczyk, "EDP Sciences : Readying CERN for connected device era", *EPJ Web Conf.*, vol. 245, p. 07015, 2020, doi:10.1051/epjconf/202024507015

[7] K. Mekki, E. Bajic, F. Chaxel, and F. Meyer, "A comparative study of LPWAN technologies for large-scale IoT deployment," *ICT Express*, vol. 5, no. 1, pp. 1–7, Mar. 2019, doi:10.1016/j.icte.2017.12.005

[8] A. Zimmaro et al., "Testing and Validation Methodology for a Radiation Monitoring Systems for Electronics in Particle Accelerators", in *IEEE Transactions on Nuclear Science*, doi:10.1109/TNS.2022.3158527

[9] R. García Alía *et al.*, "LHC and HL-LHC: Present and Future Radiation Environment in the High-Luminosity Collision Points and RHA Implications", in *IEEE Transactions on Nuclear Science*, vol. 65, no. 1, pp. 448-456, Jan. 2018. doi:10.1109/TNS.2017.2776107

[10] S. Uznanski *et al.*, "Qualification of electronics components for a radiation environment: When standards do not exist - High Energy Physics", CERN, Geneva, Switzerland, Tech. Rep, 2017. https://cds.cern.ch/record/2765495

[11] R. G. Alía *et al.*, "Single event effects in high-energy accelerators", *Semicond. Sci. Technol.*, vol. 32, no. 3, p. 034003, Feb. 2017. https://iopscience.iop.org/article/10.1088/1361- 6641/aa5695/meta

[12] W. Hajdas, F. Burri, C. Eggel, R. Harboe-Sorensen and R. de Marino, "Radiation effects testing facilities in PSI during implementation of the Proscan project", *IEEE Radiation Effects Data Workshop*, pp. 160-164, 2002. doi:10.1109/REDW.2002.1045547

[13] J. Mekki, M. Brugger, R. G. Alia, A. Thornton, N. C. D. S. Mota and S. Danzeca, "CHARM: A Mixed Field Facility at CERN for Radiation Tests in Ground, Atmospheric, Space and Accelerator Representative Environments", in *IEEE Transactions on Nuclear Science*, vol. 63, no. 4, pp. 2106-2114, Aug. 2016. doi:10.1109/TNS.2016.2528289

[14] M. Cejp, "Wireless radiation monitoring system for particle accelerators", Ms. C. thesis, Department of Measurement, Czech Technical University in Prague, September 2020.

[15] Y. Q. Aguiar *et al.*, "Implications and mitigation of radiation effects on the CERN SPS operation during the machine commissioning of run 3", presented at the 13th Int. Particle Accelerator Conf. (IPAC'22), Muang Thong Thani, Thailand, June 2022, this conference