ISBN: 978-3-95450-227-1 ISSN: 2673-5490 doi:10.18429/JACoW-IPAC2022-THPOPT063

DESIGN OF SCILAB Xcos SIMULATION MODEL FOR PULSED WIRE METHOD DATA ANALYSES

H. Jeevakhan, Department of Applied Science Education, National Institute of Technical Teachers' Training and Research, Bhopal, India
S. M. Khan, G. Mishra, School of Physics, Devi Ahilya University, Indore, India

Abstract

Pulsed wire method (PWM)is used for undulator characterisation. SCILAB Xcos simulation model is designed for the analyses of data obtained by PWM. The data obtained from PWM is given as input to the model and its output gives the magnetic field of the undulator.

INTRODUCTION

The performance of free electron laser and synchrotron radiation source depends on the quality of magnetic field of undulator. In an ideal case the on axis magnetic field of undulator is sinusoidal, such that the trajectory of relativistic electron which is injected along the axis is sinusoidal in the plane of oscillation. Any deviation in the trajectory from ideal sinusoidal trajectory produces phase error, which results in reduction of brightness of undulator radiations. It is therefore important to characterize the field quality of undulator. The magnetic field measurement by Hall probe method based on the principle of measuring the Hall voltage which is developed across one face of semiconductor say Indium Arsenide (InAs) crystal, on applying magnetic field and constant current across the other two perpendicular faces respectively. Different methods have been used to evaluate quickly the magnetic field characteristics, they are rotating coil and flipping coil methods, stretched wire measurement system. In recent years there exist interests in Pulsed wire method (PWM) magnetic field measurements of undulators/ wigglers for synchrotron radiation and free electron laser applications, which is proposed by R Warren [1]. In this method a thin wire is stretched along the undulator axis. A current pulse is passed through the wire produces a force on the wire proportional to the local transverse magnetic field. The force initiates a travelling wave that propagates in both the direction. An optical switch connected to an oscilloscope located at a place along the wire captures the traveling wave. A longer pulse returns a signal that approximates the second integral of the undulator field. For a short current pulse, the returned signal represents the first integral of the undulator magnetic field.

PWM is useful for in-vacuum insertion devices, as it can give magnetic profile of undulator with very small gap [2]. Recent studies on improvements in PWM shows its usefulness in measuring the magnetic field of planar, hybrid and superconducting undulators [3-6]. SCILAB is an open source software for numeric computation [7]. SCILAB's Xcos simulation model-based design is used for determining the trajectory of electrons in real undulator, by using the magnetic field of proposed superconducting undulator by RADIA codes [8].

The present work corresponds to develop SCILAB Xcos model for analysis of the experimental data measured from PWM. Xcos blocks are used to double differentiate the PWM data. The advantage of using model-based design over other methods is that we can visualise the output instantaneously and does not need any separate plotting software. The present model helps to visualise the filter used for elimination of noise from the signal. In present analyses, the magnetic field data of Hybrid undulator (U20) developed at DAVV lab Indore is utilised for the execution of the designed model. The details of the undulator is given in next section.

HYBRID UNDULATOR AT DAVV LAB

U20 undulator is a variable gap hybrid type undulator [4] made up of NdFeB magnets and M35 Grade Cobalt Steel poles. The undulator consists of 25 number of periods and each period is 20 mm long and each period have two magnets and two poles, thus the total length of the U20 undulator is 500 mm. There are 98 regular magnets and 98 regular poles. The regular magnets are 6.25 mm wide, 6.25 mm high and 50 mm long and regular poles are 3.75 mm wide, 4.7 mm high and 50 mm long. The U20 end magnet and end pole dimensions are 3.75 mm x 6.25 mm x 50 mm and 1.87 mm x 4.7 mm x 50 mm respectively. The gap between the jaws of undulator can be varied with the help of manually driven ball screw system from 9mm to 20 mm. The peak magnetic field range from 0.24 T to 0.05 T with respect to gap of the undulator.

PULSED WIRE METHOD SET UP

In the PWM, the second integral equation read as [1]

$$I_2 = x.\frac{2v^2\mu}{I_0} \tag{1}$$

Where,

x is displacement of wire in meter
v is the velocity in m/s
μ is linear density of wire in kg/m
I_0 is current in wire in Ampere

In the present PWM set up, beryllium-copper wire of 250 micron is used, having linear density 4.1 x10-4 g/m, I0 is 5.08 A, tension in wire is 26.26 N, hence velocity is 253.12 m/s. By inserting these values in Eq. 1 the multiplication factor comes out to be 10.34.

ISBN: 978-3-95450-227-1 ISSN: 2673-5490 doi:10.18429/JACoW-IPAC2022-THPOPT063

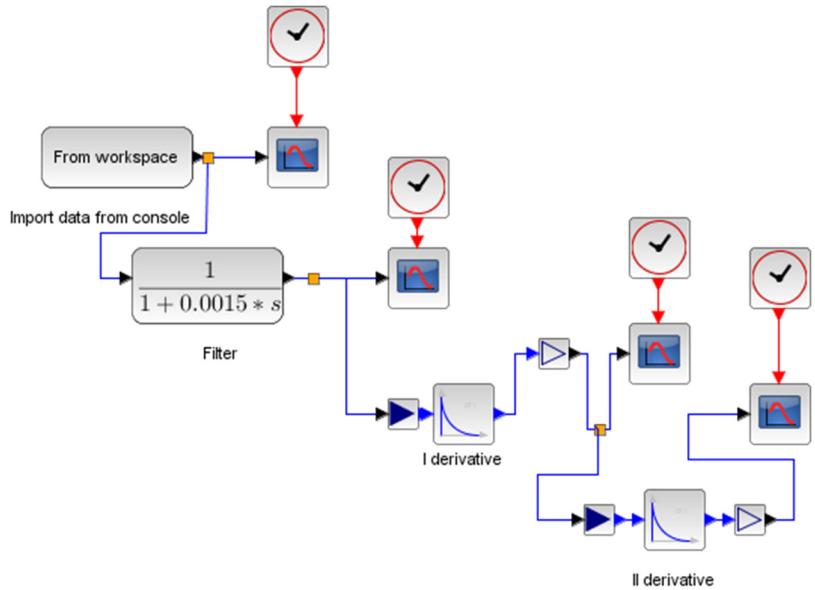

Figure 1: Xcos model for PWM data analyses.

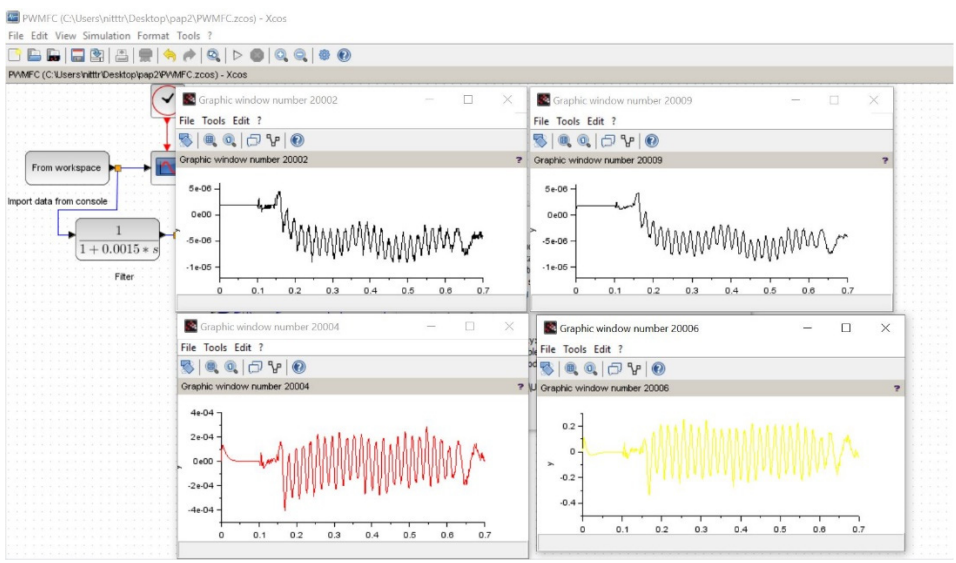

Figure 2: Output of Xcos model for PWM data analyses.

XCOS MODEL FOR PWM DATA ANALYSIS

SCILAB's Xcos model developed for analysis of experimental data obtained from PWM is displayed in Fig. 1. The voltage v/s time data obtained from the optical sensor is converted into displacement v/s distance data by multiplying with sensitivity and velocity of mechanical wave in the wire respectively. The displacement v/s distance along the undulator data is an indication of second integral of magnetic field. The displacement is then inserted in Eq. 1 to get the I_2 in tesla x meter^2. This data is fetched on console of SCILAB from excel file. The data is called from console to the Xcos model through workspace tool box. As the experimental data is incorporated with inherited noise due to sensor limitations. Filter tool box is used to extract the low frequency second integral signal. The two derivative blocks are further used to get the magnetic field along the undulator. In the present model derivative blocks of Coselica tool boxes is used, and necessary porting blocks are added as per requirement. The first derivative gives the data in tesla x meter and on further derivation it gives the magnetic field in tesla. The designed model gives four output windows. The first output is non- filtered data or the input data. The second window displays noise free filtered data with some attenuation and time lag due to filtration. The third and fourth window displays the first and second integral respectively. A screen shot of the four output windows is given in Fig. 2.

ISBN: 978-3-95450-227-1 ISSN: 2673-5490 doi:10.18429/JACoW-IPAC2022-THPOPT063

RESULTS

The fourth output window, which comes after simulation of the model is modified and presented in Fig. 3, It shows magnetic field in tesla v/s distance along the undulator in meters. The blue line is the magnetic field measured with the hall probe and the red thick line is the magnetic field from the double differentiation of the pulsed wire data. Figure 3 shows a clear match of the output of model with the magnetic field measured with Hall probe method.

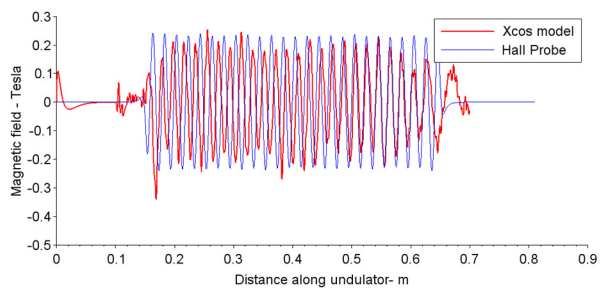

Figure 3: Magnetic field along undulator.

CONCLUSIONS

SCILAB's Xcos model is used for the analyses of the experimental data obtained from pulsed wire method for the undulator characterisation. The magnetic field results from the model is compared with magnetic field data measured with the Hall probe method. There is phase lag between the data due to filer used in the model. A rigorous analysis of the model is required for the mismatch of the magnetic field at certain point. The present model can be modified into holistic model to make PWD analysis for any current in the wire of any densities and any sensitivity points. SCILAB's Xcos model can also be utilized for determining the phase error of the undulator.

REFERENCES

[1] R.W. Warren," Limitations on the use of the pulsed-wire field measuring technique", *Nucl. Instr. Meth. Phys. Res. Sec. A*, vol. 272, no. 1–2, p. 257, 1988. doi:10.1016/0168-9002(88)90233-1

[2] C.W. Chen, H. Chen, J.C. Huang and C.S. Hwang," Pulsed-wire system for magnetic-field measurements on an in-vacuum undulator at NSRRC", *Physics Open*, vol. 11, p. 100108, 2022. doi:10.1016/j.physo.2022.100108

[3] S. Tripathi *et al.*," Pulse requirements for field integral measurements in pulsed wire method", *Nucl. Instrum. Methods Phys. Res., Sect. A,* vol. 635, no. 1, p. 121, 2011. doi:10.1016/j.nima.2011.01.117

[4] G. Mishra, R. Khullar, G. Sharma and M. Gehlot," Characterization Study of a Hybrid Undulator", *IEEE Trans. Magn.,* vol. 53, no. 12, p. 7000207, 2017.

[5] F. Kazantsev and P. Kanonik, "Pulsed wire field measurements of 38-period superconducting undulator prototype", *AIP Conference Proceedings* vol. 2299, p. 020015, 2020. doi:10.1063/5.0030373

[6] M. Fabrice, C. Muriel, F. Christian and M. Olivier," Improvements of the pulsed-wire method to measure undulators", *IEEE Trans. Appl. Supercond.,* vol. 10, no. 1, p. 1443, 2000. doi:10.1109/77.828511

[7] SCILAB, http://www.scilab.org

[8] H. Jeevakhan, S. Kumar and G. Mishra," Analysis of electron trajectories in harmonic undulator with SCILAB's model-based design codes". *in Proc 60th ICFA Advanced Beam Dynamics Workshop on Future Light Sources, FLS2018*, Shanghai, China, March 2018. paper WEA2WD03, pp. 93-97. doi:10.18429/JACoW-FLS2018-WEA2WD03