ISBN: 978-3-95450-227-1 ISSN: 2673-5490 doi:10.18429/JACoW-IPAC2022-THPOMS042

DEVELOPMENT OF A CYCLOTRON BASED EXTERNAL BEAM IRRADIATION SYSTEM FOR ELEMENTAL ANALYSIS

P. Thongjerm*, S. Wonglee, W. Pornroongruengchok, A. Ngamlamiad and K. Tangpong
Thailand Institute of Nuclear Technology, Thailand

Abstract

We present the studies carried out at the cyclotron facility at the Thailand Institute of Nuclear Technology (TINT, Nakhon Nayok, Thailand). The cyclotron accelerates up to 30 MeV proton with a maximum beam current of 200 µA. In addition to radioisotope production, the R&D beamline equipped with a five-port switching magnet allows further extension for multidisciplinary research and experiments. The first station of the research vault is dedicated to non-destructive and multi-elemental analysis using particle-induced x-ray (PIXE) and particle-induced gamma (PIGE) techniques. For this purpose, the beam is extracted through an exit foil to the air. The beam size is then shaped by a beam nozzle before reaching a sample. However, the range of the protons in air and the attenuation of x-rays may deteriorate. Therefore, the external irradiation system, including energy degrader foil, collimator and detector arrangement, are evaluated in Geant4 to optimise the proton beam quality and improve detection efficiency.

INTRODUCTION

The cyclotron (MCC30/15) can accelerate protons and deuterons. It is primarily used for radioisotope production. The energy of the beam is adjustable between 15-30 MeV. The related parameters of the cyclotron are listed in Table 1 [1]. However, the beam energy and current are not compatible with elemental analysis applications. The purpose of this study is to design an external irradiation system for elemental analysis.

Table 1: Main Parameters of the TINT Cyclotron

Parameter	Value
Type of ions:	
accelerated	H-/D-
issued	H+/D+
Accelerated ion energy	
- Proton	15-30 MeV
- Deuteron	9-15 MeV
Beam current	
- Proton	200 µA
- Deuteron	50 µA
Number of beam line	3

When a charged particle or proton interacts with the target material, the energy of the particle gradually decreases due to Coulomb interaction. Therefore, it is possible to reduce the beam energy when adding material, with a certain thickness, in between the system exit window and the target. The mean rate of the energy loss of charged particles is given by the Bethe-Bloch formula:

$$-\frac{dE}{dx} = \rho K \frac{Z}{A}\frac{z^2}{\beta^2}\left[ln\frac{2m_e c^2\gamma^2\beta^2}{I} - \beta^2 - \frac{\delta}{2} - \frac{C}{Z}\right],$$

where $K = 4\pi N_A r_e^2 m_e c^2$, N_A is Avogadro's number, r_e is the electron radius, m_e is the mass of an electron, ρ is the density of the medium, z is the atomic number of the beam particle, Z is the atomic number of the absorber, β=v/c is the speed of the particle relative to c and I is the mean excitation energy of the medium.

An appropriate for the construction of an energy degrader is considered based on several material properties including transverse dispersion, energy deviation and secondary radiation yield. The determination of degrader materials using SRIM [2] and FLUKA [3] were also carried out in other studies.

ELEMENTAL ANALYSIS SYSTEM

In the R&D vault, the beamline consists of a five-port switching magnet, beam diagnostic device, triplet quadrupole lens, niobium exit window and irradiation station. It is also equipped with a camera, for visual inspection of the sample during the analysis, and a laser positioning system for proper alignment. However, the last section of the system is under installation as shown in Fig. 1. The setup of the external irradiation station enables a multi-elemental analysis and near-surface structural characterisation of samples. The sample analysis can be carried out non-destructively without the limitation of the sample size. Figure 2 shows the detectors setup of the system.

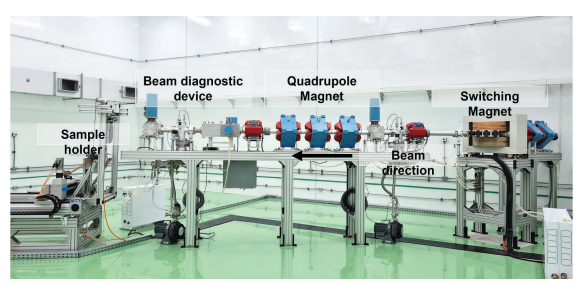

Figure 1: The current setup of R&D beam line consists of a five-port switching magnet, a set of quadrupole magnets, a beam diagnostic device and a sample holder.

In PIXE analysis, a Si(Li), 30 mm^2 active area, with 8 µm Be entrance window, is used for detecting low-energy x-ray

* piyanud@tint.or.th

ISBN: 978-3-95450-227-1 ISSN: 2673-5490 doi:10.18429/JACoW-IPAC2022-THPOMS042

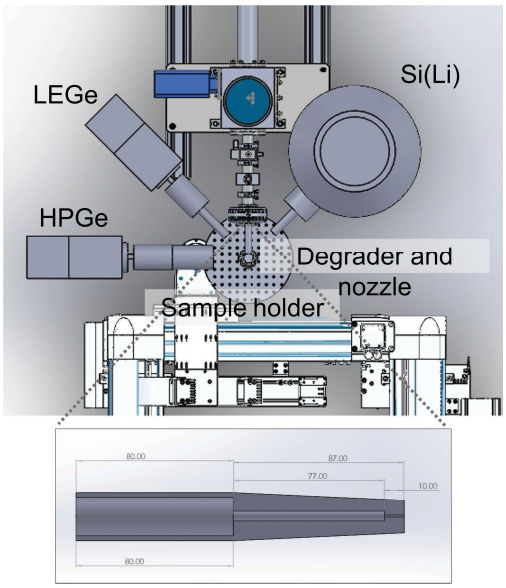

Figure 2: The setup of detectors of the external irradiation system (top) and a design of beam nozzle (unit:mm) (bottom).

emission placed at the 45° relative to the beam direction and a low-energy Ge (LEGe), 100 mm^2 active area, with 25 µm Be entrance window, is available for high-energy x-ray measurement. A hyper-pure Ge (HPGe) detector, with 50% relative efficiency, is for PIGE analysis placed at the 90° of the beam direction.

GEANT4 SIMULATION

The properties of the proton beam and the number of gamma and neutron generated after passing through various degrader materials were investigated by GEANT4 simulation code [4]. Proton initial energy of 15 MeV was selected. The thicknesses of aluminium(Al), beryllium(Be), carbon(C), copper(Cu), tungsten(W) and mylar foils which decrease the beam energy from 15 MeV to 5 MeV were calculated as 0.92 mm, 1.02 mm, 1 mm, 0.34 mm, 0.23 mm, and 1.38 mm, respectively.

The degrader was placed in the air 1.4 cm away from the exit window. A degrader volume and a target volume were created to collect the information. In the degrader, the kinetic energy of protons, number of neutrons and gamma-ray were collected. For the target plane, the position of protons and their kinetic energy were obtained. The simulations were performed with a million primary protons randomly generated across 2 mm in diameter to achieve reliable statistic. The GEANT4 implementation of the designed system is given in Fig. 3.

RESULTS AND DISCUSSION

The energy distribution of the proton at the degrader and the target plane is shown in Fig. 4. The beam energy decreased, from 15 MeV to approximately 5 MeV and 4 MeV, depending on the type of material. We expected to see the

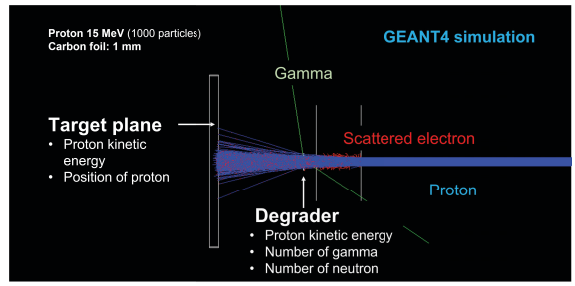

Figure 3: GEANT4 simulation of the system.

variation of energy distribution of different degrader material. However, the energy distribution of each material was shifted. This error may arise from material thickness calculations.

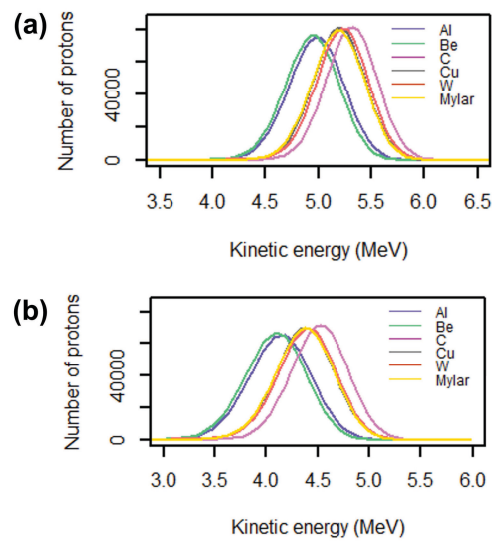

Figure 4: Energy distribution of protons after passing through various materials (a) at the degrader (b) at the target plane.

Figure 5 shows the proton position in the x-y plane of the target representing the beam size of Be and W. The transverse deviation from 20 mm in diameter of the initial proton tracks was 29.38% for Be foil and 79.85% for W foil. When considering the number of neutrons and the number of gamma in Fig. 6, C foil has the lowest neutron yield and Be gives the lowest gamma ray yield.

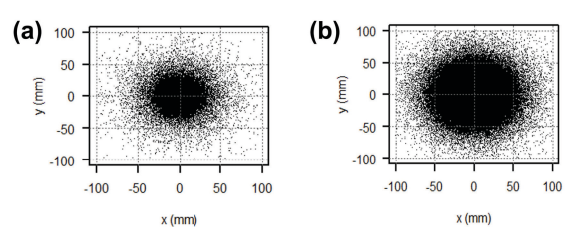

Figure 5: Position of protons on the target plane after passing through (a) Be and (b) W.

ISBN: 978-3-95450-227-1 ISSN: 2673-5490 doi:10.18429/JACoW-IPAC2022-THPOMS042

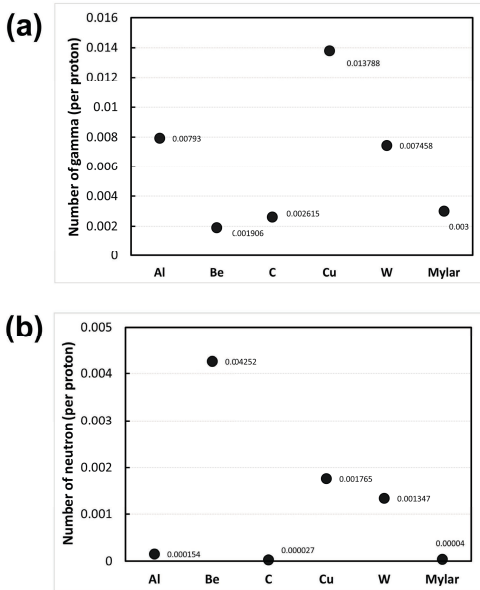

Figure 6: Number of secondary radiation generated on the degrader (per proton) (a) gamma and (b) neutron.

CONCLUSION

The results of GEANT4 simulation with monoenergetic initial proton beam show that the kinetic energy of the proton is dependent on the type of material. In this study, carbon foil was considered to be a suitable material for the energy degrader since the secondary radiation is less than other materials. Further, we aim to investigate the beam fluence on a target plane and heat simulation of the degrader foil. Moreover, the simulation of beam nozzle allowing for an optimal beam size will be continued.

ACKNOWLEDGEMENTS

The authors would like to acknowledge the supports by the Thailand Science Research and Innovation (TSRI).

REFERENCES

[1] Yu. K. Osina *et al.*, "Cyclotron Complex for Thailand Institute of Nuclear Technology", in *Proc. RuPAC'18*, Protvino, Russia, Oct. 2018, pp. 233–235. doi:10.18429/JACoW-RUPAC2018-TUPSA43

[2] Y. Kim *et al.*, "Design Study of a Beam line for the PIXE-PIGE Experiment", *J. Korean Phys. Soc.*, vol. 59, no. 2(2), pp. 563–566, Aug. 2011. doi:10.3938/jkps.59.563

[3] A.N. Yuksel *et al.*, "Design of beam instrumentation for in-vacuum materials irradiation and testing in a 30 MeV medical cyclotron", *Nucl. Instrum. Methods Phys. Res., Sect. A*, vol. 977, pp. 164290, Jun. 2020. doi:10.1016/j.nima.2020.164290

[4] J. Allison et al., "Geant4 developments and applications", in *IEEE Transactions on Nuclear Science*, vol. 53, no. 1, pp. 270-278, Feb. 2006. doi:10.1109/TNS.2006.869826