ISBN: 978-3-95450-227-1 ISSN: 2673-5490 doi:10.18429/JACoW-IPAC2022-MOPOMS029

HPC MODELING OF A HIGH-GRADIENT C-BAND LINAC FOR HARD X-RAY FREE-ELECTRON LASERS*

T. B. Bolin†, S. I. Sosa, S. G. Biedron[1,2] Department of Electrical and Computing Engineering,
University of New Mexico, Albuquerque NM 87131, USA
[1]also at Department of Mechanical Engineering,
University of New Mexico, Albuquerque, NM 87131, USA
[2]also at Element Aero, Chicago, IL 60643, USA

Abstract

During the last decade, the production of soft to hard x-rays (up to 25 keV) at XFEL (x-ray free-electron laser) facilities has enabled new developments in a broad range of disciplines. However, there is great potential for new scientific discovery at even higher energies (42+ keV), such as those that can be provided by MaRIE (Matter-Radiation Interactions in Extremes) at Los Alamos National Laboratory. These instruments can require a large amount of real estate, which quickly escalates costs: The driver of the FEL is typically an electron beam linear accelerator (LINAC) and the need for higher electron beam energies capable of generating higher energy X-rays can dictate that the LINAC becomes longer. State of art accelerating technology is required to reduce the LINAC length by reducing the size of the cavities, which in turn provides for a high gradient of acceleration. Compact accelerating structures are also high-frequency (S, C, and X-bands). Here, we describe using the Argonne Leadership Computing Facility (ALCF), located at Argonne National Laboratory [1] to facilitate our investigations into design concepts for future XFEL high-gradient LINAC's in the C-band (~4-8 GHz). We investigate a Disk Loaded Wave Guide (DLWG) traveling wave (TW) structure modeled for operation at f =5.712 GHz as modelled at the ALCF using VSim software. We used an existing account under the LIGHTCONTROL project at the ALCF.

INTRODUCTION

X-ray Free Electron Lasers (XFEL) are driven by a high energy electron linear accelerator, where the need for higher energy X-rays requires higher electron beam energies. To first order, this requires longer LINACs and larger infrastructure, which quickly makes the costs prohibitive. Next generation XFELs, such as FEL projects planned at LANL [2] and UCLA [3], will take advantage of high-gradient, compact accelerating structures in the C and X-band frequency regimes, which will allow a better use of the available physical space.

The C-band frequency band ranges from 4 to 8 GHz. In this regime, cavity dimensions are on the order of a few centimeters, making them very compact as compared to cavities used in previous generation light sources. Design concepts have been discussed in [4]. It has been established that C-band design considerations must be incorporated into the actual design by using 3D EM simulations. As systems become more complex and structures require refinement, especially in a regime where particle beams must be optimized, increasing the amount of computing power needed to efficiently carry out simulations.

C-band Cavity Design

We are using VSim to investigate different geometries for accelerator applications at a C-band frequency [5]. A DLWG C-band accelerating structure is presented in Figure 1. Table 1 shows the dimensions of the array.

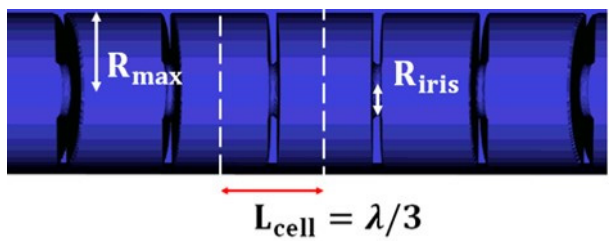

Figure 1: DLWG cavity array.

The DLWG is essentially a cylindrical waveguide structure with an added periodic array of disk loads that reduce the phase velocity of the travelling wave to match with the electron beam velocity. This structure is equivalent to a multi-cell cylindrical (pillbox) cavity. The DLWG structure has a cell length equal to $\lambda/3$ to match the phase velocity of the travelling electromagnetic wave to the velocity of relativistic electrons. This corresponds to a $2\pi/3$ phase advance between adjacent cells. The design concepts should accommodate multiple considerations including high accelerating gradient, low field breakdown rates, various fabrication techniques, choice of material, and the possibility of cryocooling [6]. Here we briefly describe the procedure to submit VSim simulations to the Argonne Leadership Computing Facility and show a simple figure as generated via the ALCF representing preliminary electromagnetic considerations of the DLWG array.

* This work was performed under Contract No. 89233218CNA000001, supported by the U.S. Department of Energy's National Nuclear Security Administration, for the management and operation of Los Alamos National Laboratory (LANL). This research also used resources of the Argonne Leadership Computing Facility, a DOE Office of Science User Facility supported under Contract DE-AC02-06CH11357.
† tbolin@unm.edu.

Content from this work may be used under the terms of the CC BY 4.0 licence (© 2022). Any distribution of this work must maintain attribution to the author(s), title of the work, publisher, and DOI

ISBN: 978-3-95450-227-1 ISSN: 2673-5490 doi:10.18429/JACoW-IPAC2022-MOPOMS029

Content from this work may be used under the terms of the CC BY 4.0 licence (© 2022). Any distribution of this work must maintain attribution to the author(s), title of the work, publisher, and DOI

Table 1: Parameters Defining the DLWG Structure

	DLWG
Phase advance	2π/3
TM_{010} freq. (GHz)	5.712
Cell Length (mm)	17.5
R_{cav} (mm)	21
R_{iris} (mm)	7

EM MODELING OF ACCELERATING STRUCTURES ON ALCF'S THETA

Submitting VSim simulations to the ALCF requires multiple steps, and a procedure tailored for our particular purposes was developed to upload, run, and visualize VSim simulations on Argonne's THETA and Cooley.

The primary purpose of Cooley is to analyze and visualize data produced on ALCF supercomputers. Equipped with state-of-the-art graphics processing units (GPUs), Cooley converts computational data into high-resolution visual representations. The data is visualized with VisIt, which is one of a selection of visualization options available on Cooley [6]. LLNL's VisIt is an open source, interactive, scalable, visualization, animation and analysis tool. From Unix, Windows or Mac laptop or workstations, users can interactively visualize and analyze data ranging in scale from small (<10 core) desktop-sized projects to large (>100,000 core) leadership-class computing facility simulation facilities [7].

VSim is based on the Vorpal engine [8,9] and VSim is well suited for the electromagnetic and charged particle problems like the ones involved in the cavity design process. We use VSim for the analysis of the DLWG structure, where the geometry was created using the constructive solid geometry tool from VSim. VSim also works in 1, 2, or 3 dimensions facilitating the modeling using algorithms designed for high performance computing and is already in use at the ALCF.

Figure 2 shows a cell containing an iris as generated during the simulation on THETA, indicating that the procedure for transferring simulations into THETA functions properly.

It is possible to run scripts on THETA for the purpose of optimization, and that will be employed in the future for LINAC optimization. For example, the parameters defining the geometric shape for this electromagnetic mode at C-band as presented in Table 1 can systematically varied, thus altering cavity Figures of Merit, such as the geometry and quality factors [10].

CONCLUSION

We are using VSim to investigate different geometries for accelerator applications at a C-band frequency. For next generation XFEL technology, we require these traveling wave cavities to operate on the 2π/3-mode at 5.712 GHz. We provide a proof-of-principle result that demonstrates that we have imported simulations on Argonne's ALCF resources for C-band accelerating structures. On-going work focuses on geometry optimization for high-accelerating gradient and low breakdown rates. Also, as other characteristics are identified for optimization, such as additional fabrication challenges that need to be factored into the budget.

Particle simulations and cryocooling studies are also planned.

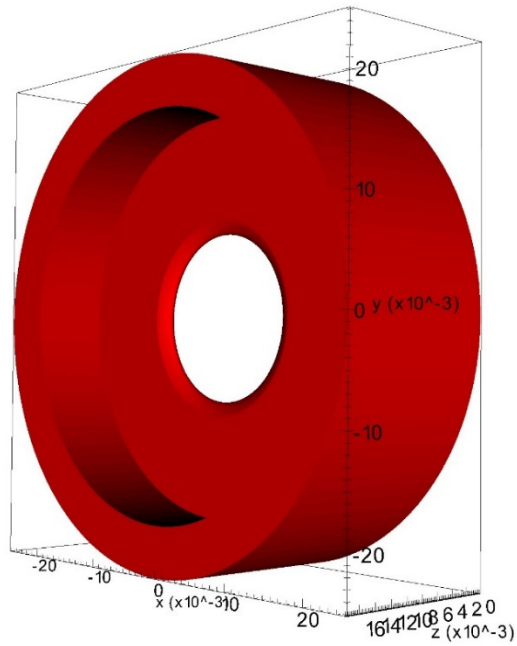

Figure 2: Section of the DLWG array as generated at the ALCF.

ACKNOWLEDGEMENTS

Many thanks to Bruce Carlsten, John Lewellen and Evgenya Simakov for on-going discussions. Many thanks to John Cary and the Tech-X staff for invaluable discussions and technical support. Many thanks for computing resources from Element Aero.

REFERENCES

[1] Argonne Leadership Computing Facility (ALCF), https://www.alcf.anl.gov/.

[2] R. L. Sheffield, C. W. Barnes, and J. P. Tapia, "Matter-Radiation Interactions in Extremes (MaRIE) Project Overview", in *Proc. FEL'17*, Santa Fe, NM, USA, Aug. 2017, pp. 24-28. doi:10.18429/JACoW-FEL2017-MOD06

[3] J.B. Rosenzweig *et al.*, "An ultra-compact x-ray free-electron laser", *New J. Phys.*, vol. 22, p. 093067, Sep. 2020. doi:10.1088/1367-2630/abb16c

[4] T. B. Bolin, S. Biedron, J. R. Cary, M. Dal Forno, and S. I. Sosa Guitron, "Design Concepts for a High-Gradient C-Band Linac", in *Proc. IPAC'21*, Campinas, Brazil, May 2021, pp. 3919-3921. doi:10.18429/JACoW-IPAC2021-THPAB069

[5] VSim, https://txcorp.com/vsim/.

[6] Visit on Cooley, https://www.alcf.anl.gov/support-center/cooley/visit-cooley/.

ISBN: 978-3-95450-227-1 ISSN: 2673-5490 doi:10.18429/JACoW-IPAC2022-MOPOMS029

[7] VisIt, https://visit-dav.github.io/visit-website/.

[8] C. Nieter and J. R. Cary, "VORPAL: a versatile plasma simulation code ", *J. Comput. Phys.*, vol. 196, pp. 448-473, May 2004. doi:10.1016/j.jcp.2003.11.004

[9] A. D. Cahill *et al.*, "Measurements of Copper RF Surface Resistance at Cryogenic Temperatures for Applications to X-Band and S-Band Accelerators", in *Proc. IPAC'16*, Busan, Korea, May 2016, pp. 487-490. doi:10.18429/JACoW-IPAC2016-MOPMW038

[10] H. Padamsee, "The science and technology of superconducting cavities for accelerators", *Supercond. Sci. Technol.*, vol. 14, no. 4, p. R28, 2001.

Content from this work may be used under the terms of the CC BY 4.0 licence (© 2022). Any distribution of this work must maintain attribution to the author(s), title of the work, publisher, and DOI