ISBN: 978-3-95450-227-1 ISSN: 2673-5490 doi:10.18429/JACoW-IPAC2022-FROXSP3

FIRST OPERATION OF A KLYSTRON FITTED WITH A SUPERCONDUCTING MgB_2 SOLENOID

N. Catalan-Lasheras, M. Boronat, G. McMonagle, I. Syratchev, CERN, Geneva, Switzerland
A. Baig, A. Castilla-Loeza, Cockcroft Institute, Lancaster, UK
T. Kimura, P. Kolda, Communication & Power Industries, Palo Alto, California, USA
S. Michizono, A. Yamamoto, KEK, Ibaraki, Japan

Abstract

As part of the effort to reduce the energy consumption of large research facilities using accelerators, high efficiency klystrons are being developed by CERN. However, a large fraction of the wall-plug power required to operate these klystrons is used in the focusing magnetic elements around the klystron in the form of normal conducting solenoids. In 2019, a prototype solenoid made of MgB_2 was manufactured as a joint venture from CERN, Hitachi and KEK with the aim of reducing the power consumption by a factor ten using higher temperature superconductors. The characteristics of the magnet were measured upon manufacture and checked after the transport across the world. In 2020, the MgB_2 magnet was integrated around one of the klystrons in the X-band facility at CERN and put into operation in the beginning of 2021. We present in this paper the final performance of the klystron when fitted with the new superconducting (SC) solenoid and compare it with the standard normal conducting solenoid system.

INTRODUCTION

Originally motivated by the possibility to power the CLIC low energy stage using klystrons as RF power source, CERN led a strong initiative to improve the efficiency of the existing commercial tubes from 40% to about 65% [1]. This gain in efficiency could save 10.6 kW average power in a single klystron operated at 50 MW peak power, 2.2 µsec pulse length, and 100 Hz repetition rate. In a facility that comprise about 5500 klystrons, this corresponds to a saving in average power of 58.3 MW.

With the same motivation in mind, we turned our attention to the solenoid electromagnet required to focus and confine the electrons in the klystron RF channel. For the same pulsed 50 MW klystron, the electromagnet uses about 20 kW wall plug power which represents about 30% of the overall wall-plug power consumption of each klystron-modulator system. A collaboration between CERN, KEK, and Hitachi [2] was established to build a prototype solenoid based on MgB_2 superconductor designed to fit the X-band, 50 MW pulsed klystron manufactured by Communication & Power Industries (CPI) currently in use in the X-band facility at CERN [3]. The final solenoid was built and tested at the manufacturer premises [4, 5] demonstrating that it could be operated in very stable conditions and with a total plug-power of <3 kW for cryo-cooler operation, significantly below the conventional magnet. The main characteristics of the magnet are shown in Table 1.

After the delivery to CERN, the magnet was cooled down and subjected to magnetic measurements to confirm the integrity of the magnet. Magnetic measurements were also done in the conventional magnet to establish the reference field necessary for the klystron. After installation in the test facility and in coordination with the klystron manufacturer, we adjusted the magnetic circuit to recover the original performance at the factory.

Table 1: Main Parameters of the Super-Conducting Solenoid Prototype

Parameter	Specification	
SC material	MgB_2	
Nominal Field	0.8	T
Coil maximum field	1.06	T
Nominal current	57.1	A
Coil inner diameter	337	mm
Coil outer diameter	379	mm
Inductance	7.23	H
Operating temperature	< 20	K
Load factor (@20K)	45	%
Power (for cryo-cooler	< 3	kW
Total weight	600	kg

INTEGRATION

The new solenoid was built to be installed around the VKX-8311A klystron manufactured by CPI and operated at two of the CERN X-band test benches. The inner and outer diameter, and the length match the electromagnet shipped originally with the klystron.

The two MgB_2 coils forming the solenoid can be unbalanced with an additional power supply to shape the magnetic field. They are housed in a vacuum volume and cooled by conduction below 20 K. The cryostat partly made of iron doubles also as return yoke for the magnetic field. A large volume on the side of the magnet houses the current leads, a cold head, vacuum feeds, and the feedthroughs for instrumentation. The cold head connects a Cu thermal link to a 3 kW commercial cryocooler compressor. The solenoid (green) and the 50 MW klystron (yellow), installed on the modulator of the X-band test facility at CERN, are shown in Fig. 1. Special care needed to be taken during transport and installation due to the unbalanced weight of the group.

Unlike a traditional solenoid, the SC magnet requires a vacuum system and an ion pump (red in the picture) capable of maintaining a good insulating vacuum. It does not require however a cooling water system whose interlock needs to be strapped in the modulator side.

ISBN: 978-3-95450-227-1 ISSN: 2673-5490 doi:10.18429/JACoW-IPAC2022-FROXSP3

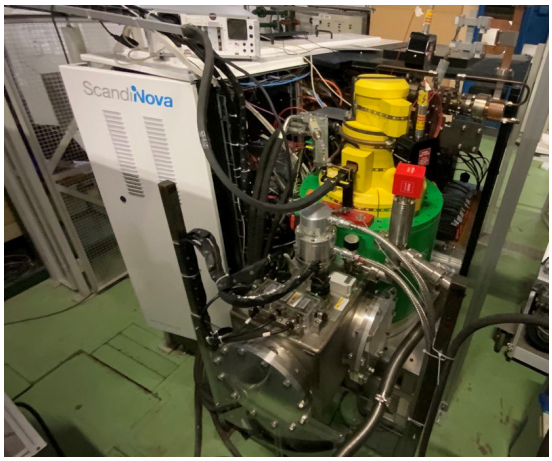

Figure 1: Superconducting MGB_2 solenoid, with the klystron, installed on the modulator.

During the first cool-down cycles at CERN, the temperature on the cold head and the two magnets' coils was recorded together with the voltage drop in each coil for an applied current of 10 mA. The cooling down process takes around 150 h with a longer time for natural warm-up. This last process can be accelerated by filling up the solenoid with N_2 gas once the temperature is higher than the N_2 condensation point (see Fig. 2). During the cool-down, we observed the transition to superconductivity at 36.1 K for both coils, matching the measured value when characterizing the MgB_2 super-conducting wire [5]. The present cryocooler operates at about 15 K, well below the recommended operation temperature of 20 K.

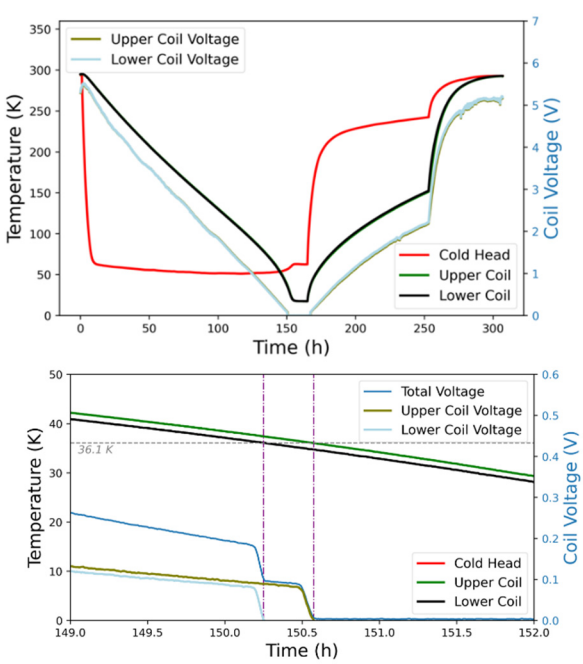

Figure 2: Top: Temperature in the cold head and coils and voltage across the coils of the solenoid for a full cool-down and warm-up cycle. Bottom: detail of the transition to superconductivity for both coils.

The stand-alone operation of the SC solenoid is very stable, and the quench behaviour of the magnet has been reported in [2]. To protect the klystron during operation, a new interlock has been designed and implemented. The interlock system is illustrated in Fig. 3 is based on a Beckhoff PLC, with several high precision ADCs to monitor the vacuum, temperature, the current injected and the voltage on the solenoid. The modulator operation is vetoed until the monitored signals are inside a very narrow range. To protect the solenoid, no current can be switched on if vacuum and temperature conditions are not met.

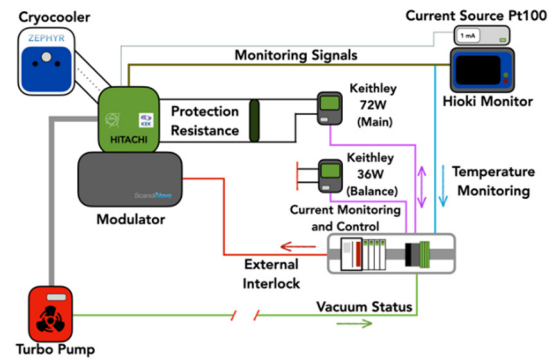

Figure 3: Integration schematics of the new superconducting solenoid control system.

MAGNETIC MEASUREMENTS

To validate the delivery of the SC solenoid, and to compare its performance with the electromagnet, magnetic field measurements of both solenoids were performed at CERN using a hall-probe. The SC magnet was built as a generic proof of principle and is designed to provide a central field of up to 0.8 T, with an input current of 57.1 A. As the nominal operation of the klystron only requires about 0.4 T, the current was scaled down linearly to 29.9 A to fit the factory magnetic profile, as shown in Fig. 4.

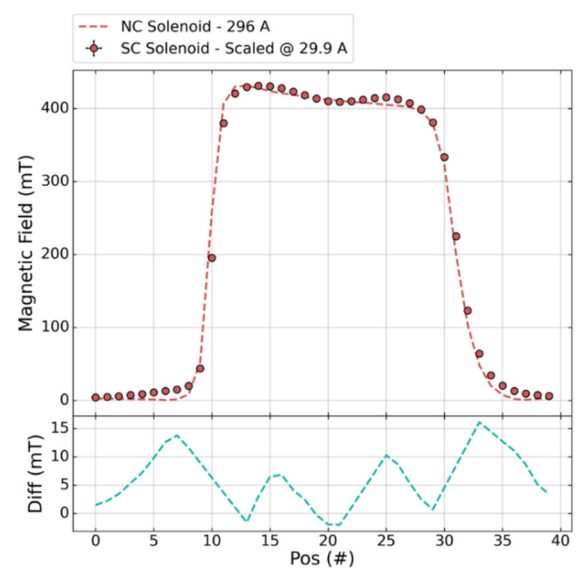

Figure 4: Magnetic field profile for both solenoids for nominal operation. Bottom. Local difference of magnetic field between the two magnets.

ISBN: 978-3-95450-227-1 ISSN: 2673-5490 doi:10.18429/JACoW-IPAC2022-FROXSP3

After adjusting the current, small, local field differences in the mT level remain. In particular, the magnetic field inside the superconducting solenoid decreases less rapidly than inside the electromagnet. From the dynamics of the klystron, we know that the area closer to the gun is the most sensitive to magnetic field variations. This is indeed so critical that a dedicated counter coil is delivered with the magnet and operated independently from the main solenoid. Its field and current are much smaller than the main solenoidal field but still important enough to optimize the klystron performance.

KLYSTRON PERFORMANCE

After installation of the SC solenoid around the klystron at the CERN test facility, the solenoid and counter coil currents are set to nominal values and the interlocks are verified. We then proceeded with diode tests, to near nominal klystron high-voltage parameters (~ 410 kV), which showed no significant interception in the body as expected. As the RF line connected to the klystron had only been conditioned to about 20 MW peak power, the measurements were limited to 350 kV max to achieve 20 MW at saturation. RF gain curves were therefore taken at low power and using short pulses to check the final performance of the full system. The vacuum level of the tube was closely monitored but no losses were detected. Changes of perveance were also negligible during the tests.

After adjusting for central magnetic field, the gain curve for the SC magnet is slightly different than the one obtained in the factory. As seen in the previous section, we suspected the small variations in the solenoid fringe field next to the gun to have a large effect, so we adjusted the counter-coil current to compensate. The original performance could be reproduced by increasing the current in the counter-coil by approximately 20%.

Gain curves performed at different modulator HV levels are shown in Fig. 5 for both conventional and SC solenoid and prove that this correction factor is independent of the peak power. The same current should thus be used at nominal power of 50 MW (@ 415 KV) for which the klystron performance is tuned at the factory.

Also, the perveance of the tube changes slightly with respect to that observed with the conventional magnet.

CONCLUSION

A superconducting solenoid design to be used with the high-power X-band klystron at CERN has been evaluated successfully in nominal conditions. The energy consumption is confirmed to be < 3KW plug-power and could be reduced even further by using a less powerful cryocooler while keeping the temperature below T < 20 K.

To deliver a central field of about 0.4 T, the current on the SC solenoid can be reduce below 30 A. This constitutes a potential saving also in the power supply compared with the 200 - 500 A supply currently needed. Magnetic field measurements of both solenoids differ in some areas and, in particular next to the klystron cathode. Minor adjustments of the counter-coil field can be done to match the klystron performance seen with the conventional magnet. This adjustment is fully within the tuning range of the current power supply and remains constant when increasing klystron power.

The MgB_2 solenoid is currently installed in the X-band test facility at CERN and is operated routinely during power tests.

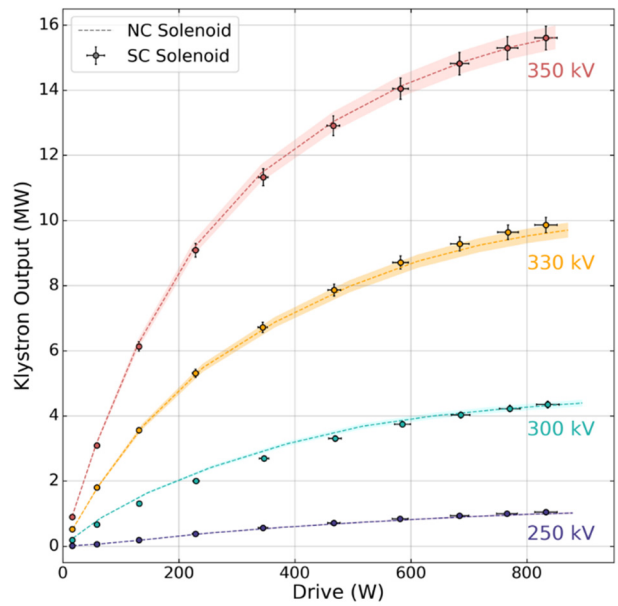

Figure 5: Comparison of different gain curves for klystron operation with conventional and SC solenoid at adjusted values for main and counter-coil currents.

REFERENCES

[1] J. Cai and I. Syratchev, "Design Study of X-band High Efficiency Klystrons for CLIC", in *Proc. 21st Int. Conf. on Vacuum Electronics (IVEC'20),* Oct. 2020, pp. 121-122. doi:10.1109/IVEC45766.2020.9520585

[2] A. Yamamoto *et al.*, "Applying Superconducting Magnet Technology for High-Efficiency Klystrons in Particle Accelerator RF Systems", *IEEE Transactions on Applied Superconductivity*, vol. 30, no. 4, pp. 1-4, Jun. 2020. doi:10.1109/TASC.2020.2978471

[3] https://www.cpii.com/docs/datasheets/154/VKX-8311A%20Datasheet.pdf

[4] H. Tanaka *et al.*, "Performance of MgB2 Superconductor Developed for High-Efficiency Klystron Applications", *IEEE Transactions on Applied Superconductivity*, vol. 30, no. 4, pp. 1-5, Jun. 2020. doi:10.1109/TASC.2020.2970391

[5] H. Watanabe *et al.*, "Development of Prototype MGB2 Superconducting Solenoid Magnet for High-Efficiency Klystron Applications", *IEEE Transactions on Applied Superconductivity*, vol. 30, no. 4, pp. 1-6, Jun. 2020. doi:10.1109/TASC.2020.297223